Three points about the fate of black holes

Carlo Rovelli

I. The false dogma

II. The A, B and C regions: three distinct physical problems

III. The likely scenario

I. The false dogma

The debate on black hole information is confused by a false dogma:

That the number of <u>internal</u> states of a real black is bounded by the horizon area.

Event/dynamical (or trapping) horizon
Thermodynamic/von Neumann entropy
Boundary/internal states
Stationary/evolving black holes's

The false dogma leads to a misleadingly strong version of the holographic hypothesis.

Without this, there is no BH information puzzle:

Quantum unitarity and equivalence principle are compatible.

An event horizon is the boundary of the past of future infinity

An trapping horizon is the boundary of the region where the area of outgoing null surfaces decreases

Physical black holes have a trapping horizon

Whether or not this horizon is an event horizon depends on quantum gravity

Event/dynamical (or trapping) horizon

Onset of quantum gravity regime $\mathcal{R} \sim l_{Pl}^{-2}$

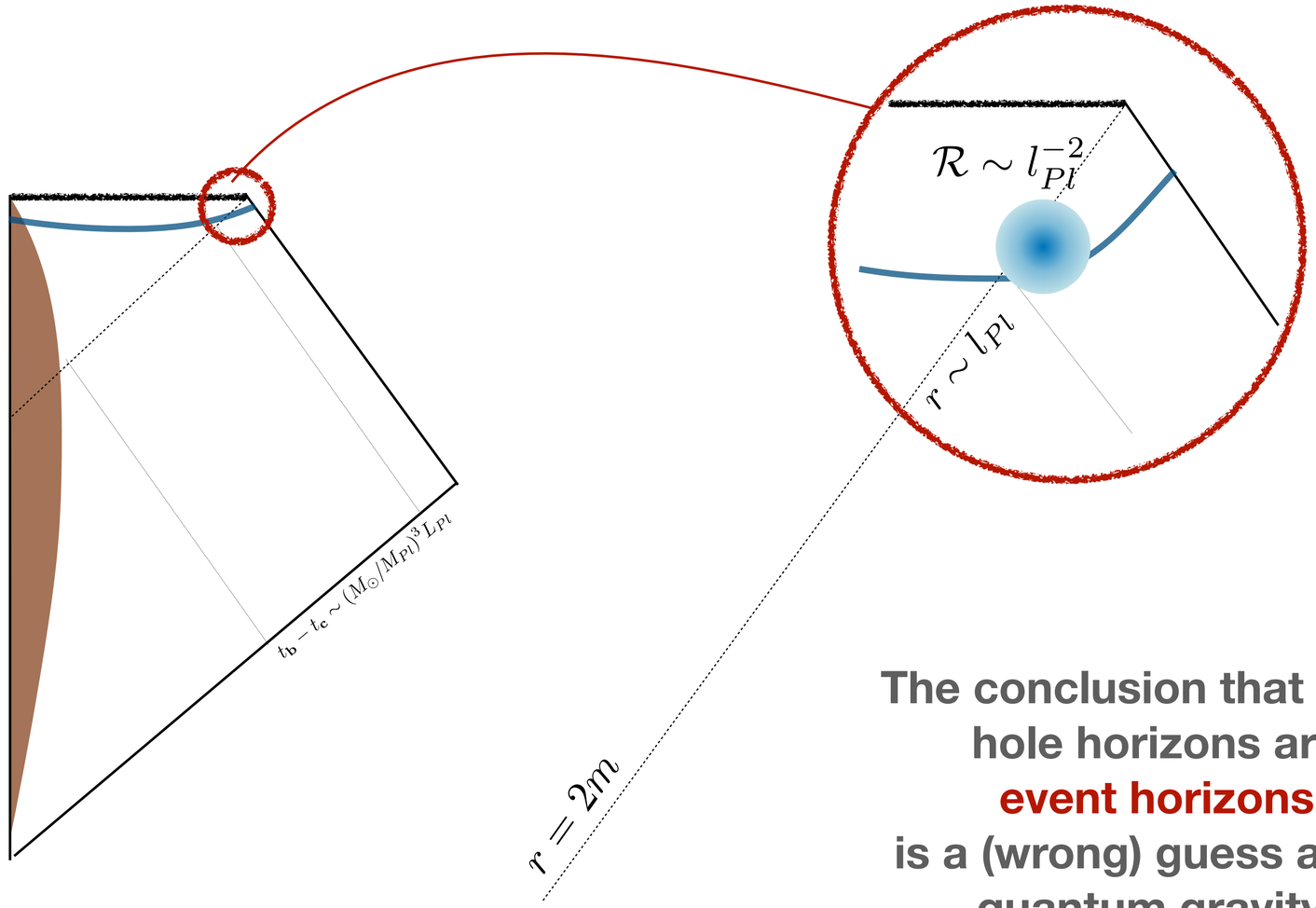

The conclusion that black hole horizons are event horizons is a (wrong) guess about quantum gravity!

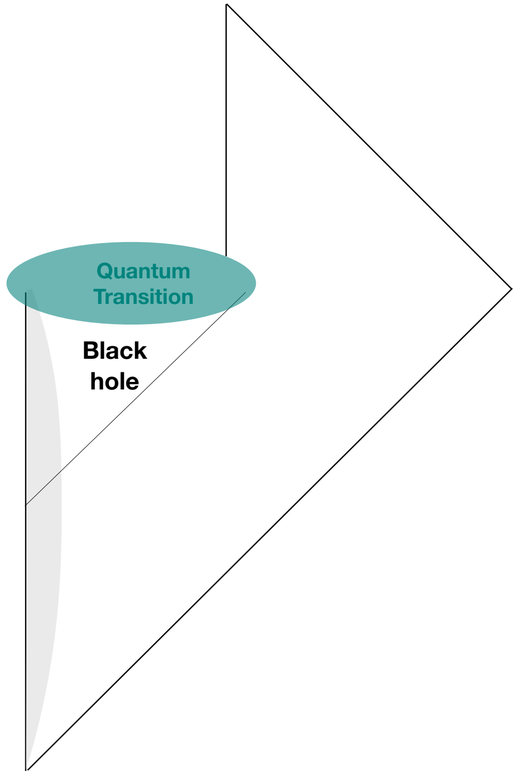

A nonsense:
no current physical theory predicts this!

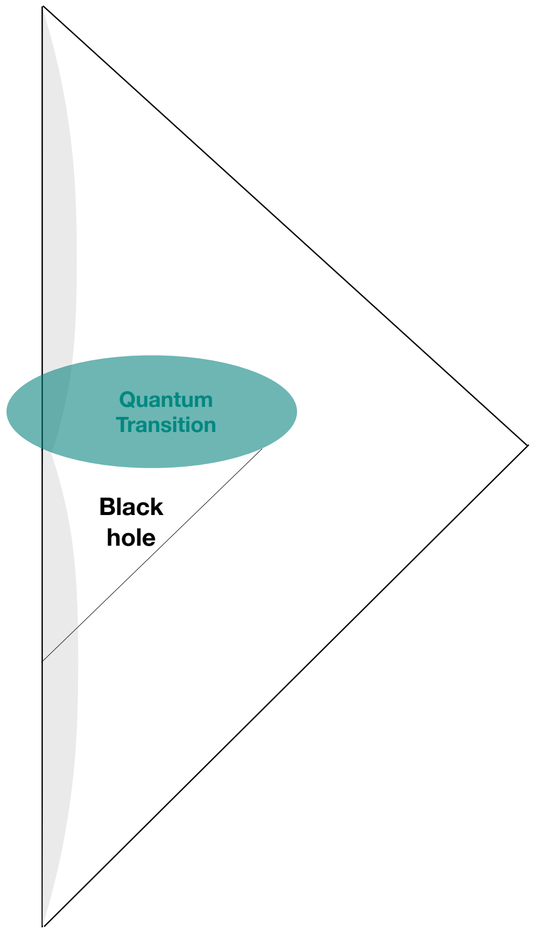

Far more plausible

Thermodynamic/von Neumann entropy

The von Neumann entropy measures entanglement

$$\rho_A = Tr_B\left[|\Psi_{AB}\rangle\langle\Psi_{AB}|\right]$$

$$S_{vN} = -k\ Tr[\rho_A \log \rho_A]$$

The thermodynamic entropy measures the number of **accessible** states

$$S_T = k \log W$$

$$S_T = k \log \dim \mathcal{H}$$

Is the von Neumann entropy bounded by the thermodynamic entropy?

No, it is not!

A simple example of $S_{vN} > S_T$

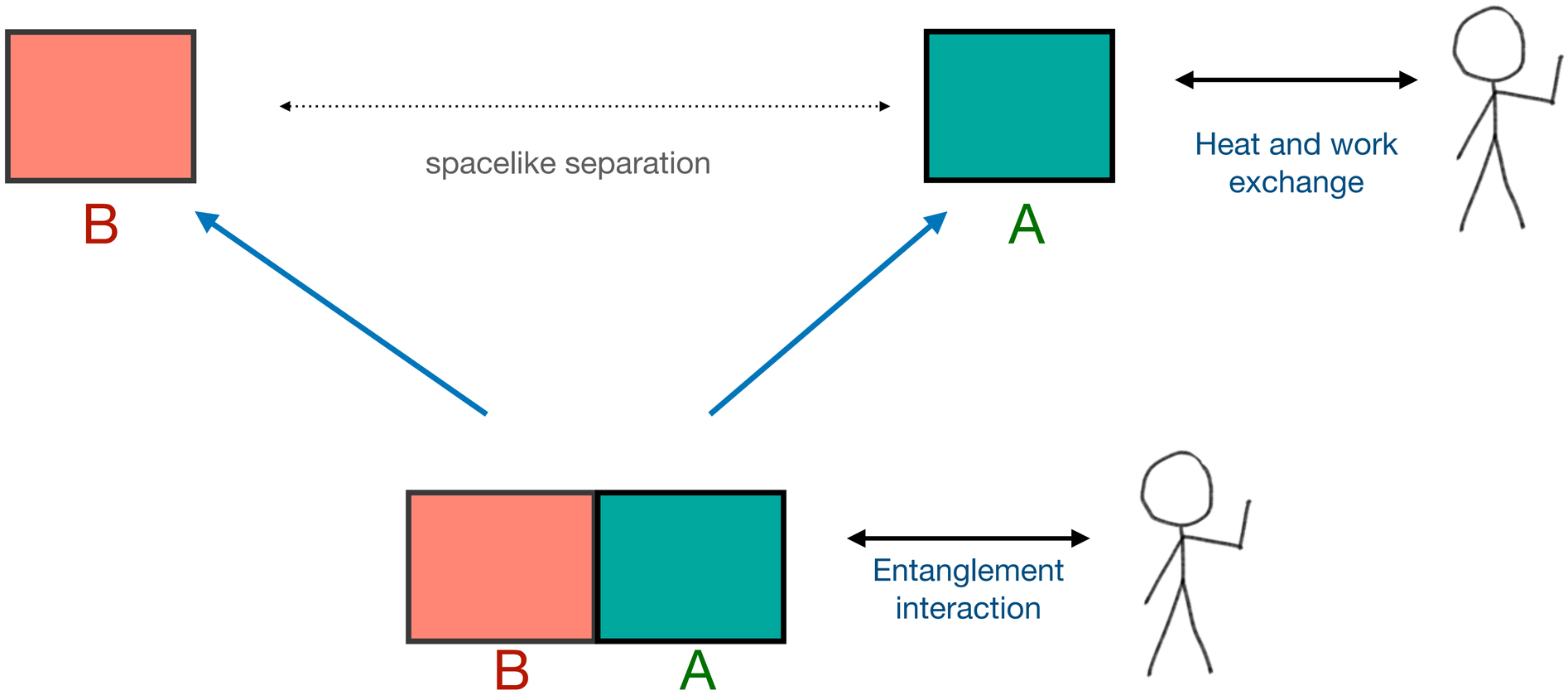

The thermodynamical entropy is determined by the number of states of A

The maximal von Neumann entropy is determined by the number of states of A+B

For a black hole: A is the region around the horizon

For a black hole: B is the huge internal region

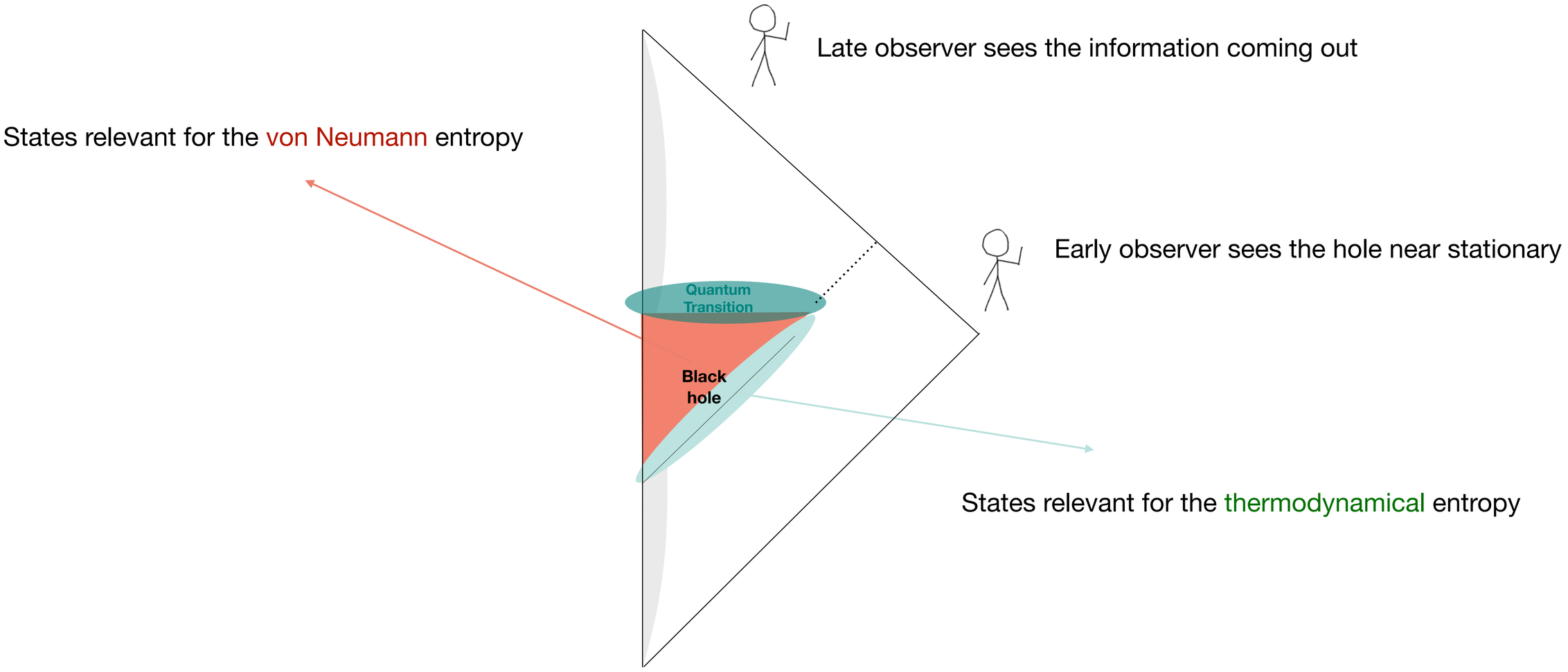
Late observer sees the information coming out
States relevant for the von Neumann entropy
Early observer sees the hole near stationary
Quantum Transition
Black hole
States relevant for the thermodynamical entropy

Event/dynamical (or trapping) horizon
Thermodynamic/von Neumann entropy
Boundary/internal states
Stationary/evolving black holes's

The false dogma leads to a misleadingly strong version of the holographic hypothesis.

Without this, there is no BH information puzzle:

Quantum unitarity and equivalence principle are compatible.

II. The A, B and C regions: three distinct physical problems

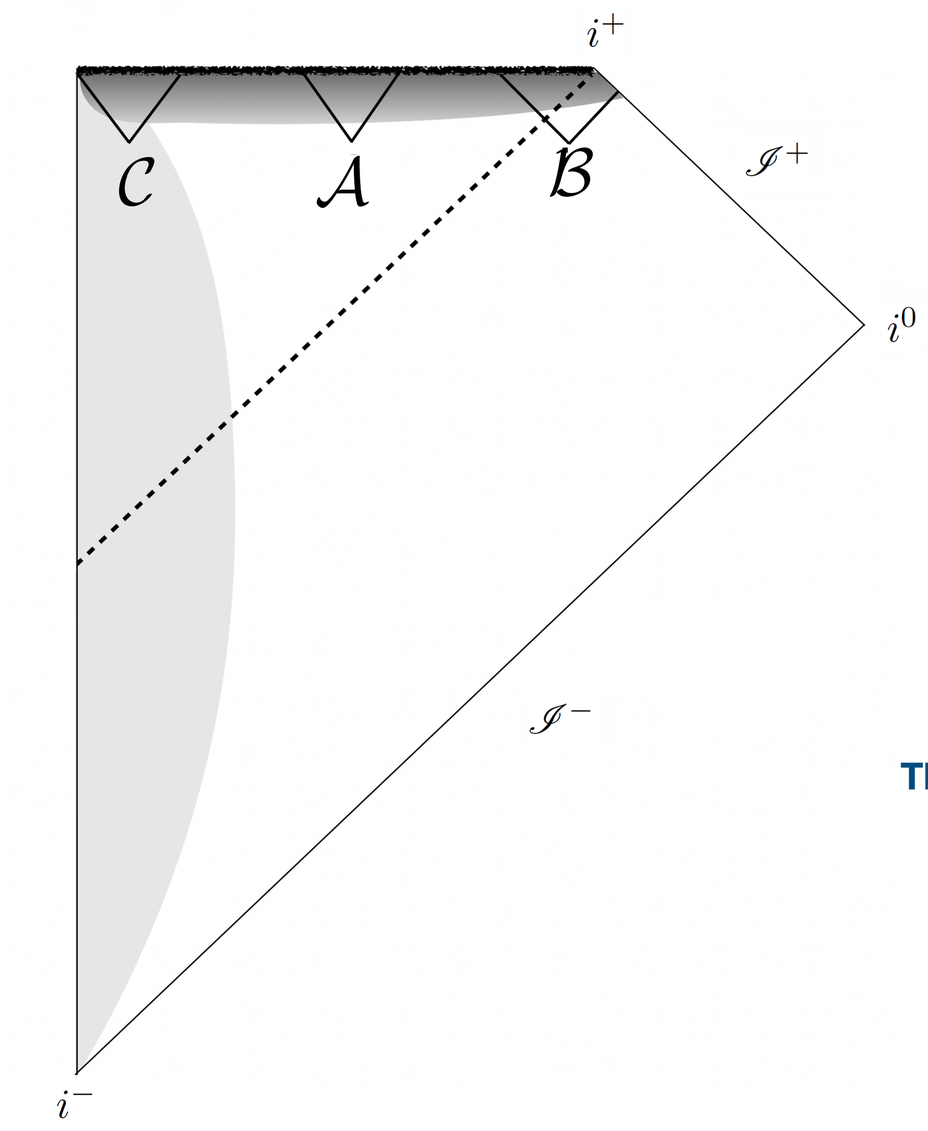

The processes in the 3 regions, a, b and c are independent from one another.

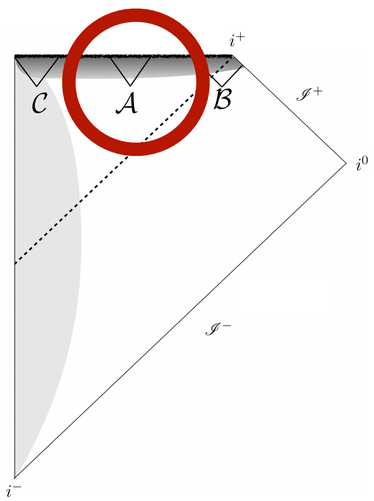

A large number of converging results

Transition to a trapped to an anti trapped region

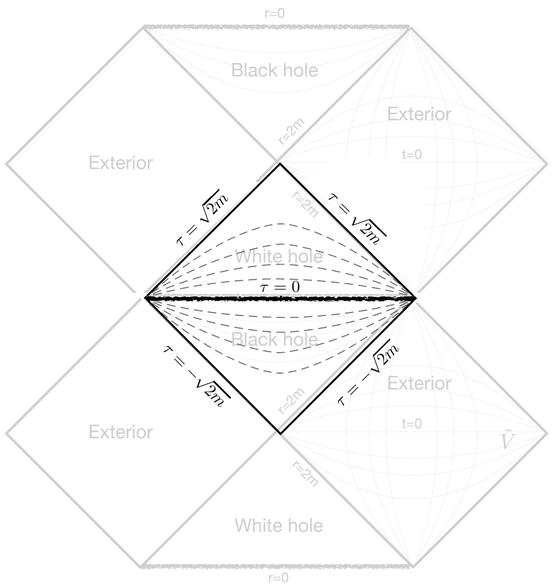

An **effective-metric**

$$\mathrm{d}s_l^2 = -\frac{4(\tau^2+l)^2}{2m-\tau^2}\mathrm{d}\tau^2 + \frac{2m-\tau^2}{\tau^2+l}x^2 + (\tau^2+l)^2\mathrm{d}\Omega^2\,,$$

$$\tau^2 = r_{Schw}$$
$$x = t_{Schw}$$

$$l \to 0, \quad ds_l \to ds_{Schw}$$

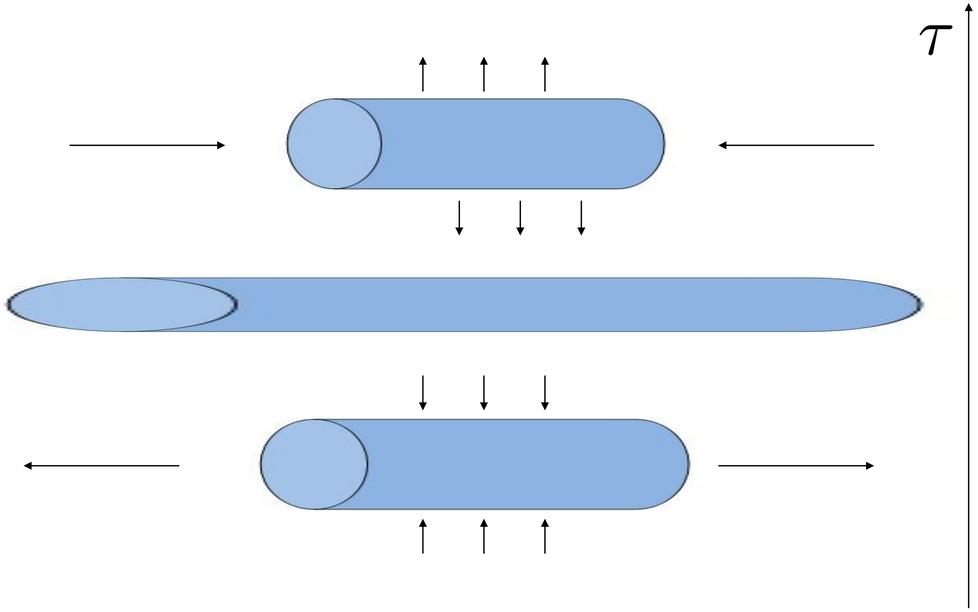

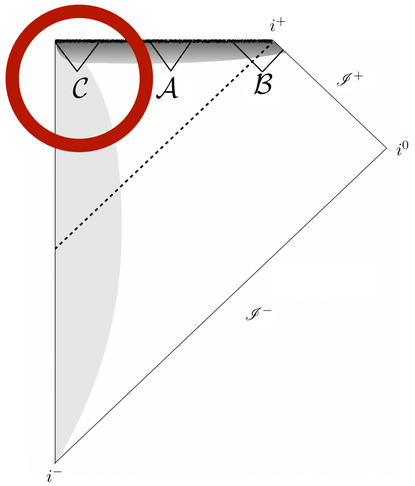

The $\mathcal{C}$ region: a star compressed to Planckian density

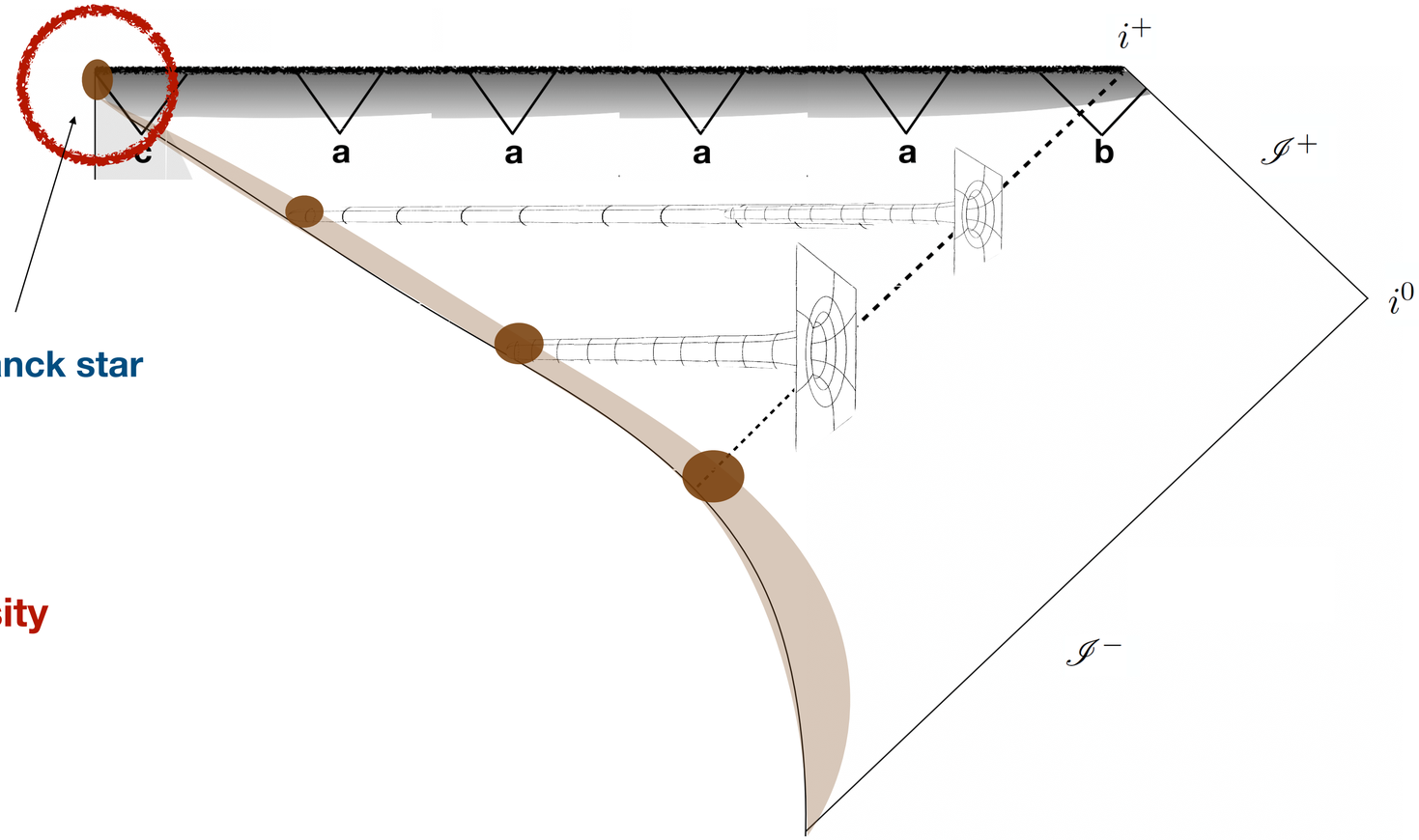

Planck star

Planck star:
A bounce at Plank density

The $\mathcal{B}$ region: a key result in classical GR

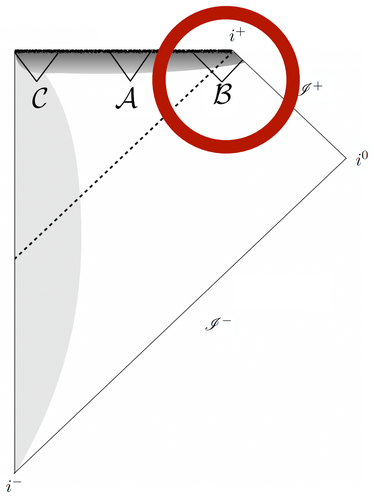

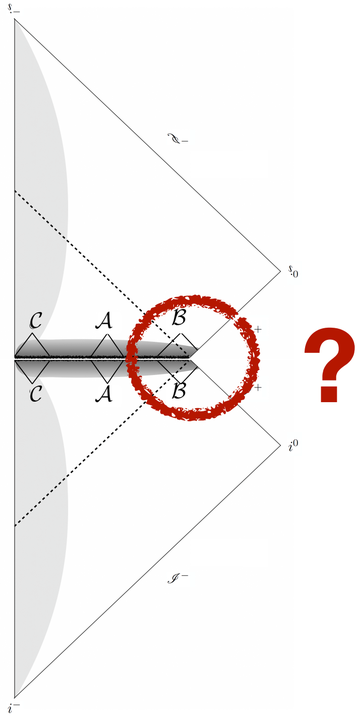

?

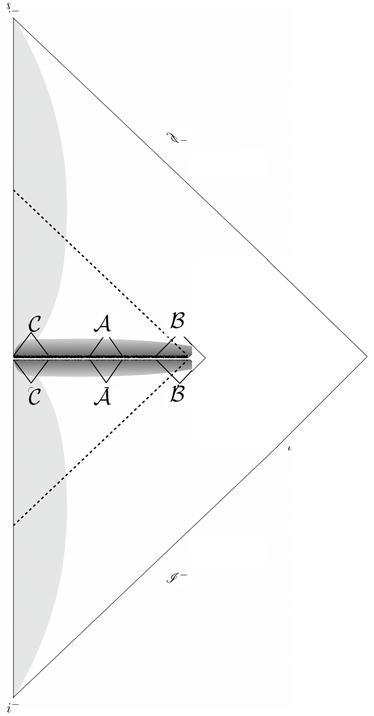

- **Black hole fireworks: quantum-gravity effects outside the horizon spark black to white hole tunneling**, H Haggard, CR, Phys. Rev. D 92, 104020 (2015), 1407.0989.

- **Black to white transition of a charged black hole**
  Antoine Rignon-Bret, Carlo Rovelli, :2108.12823

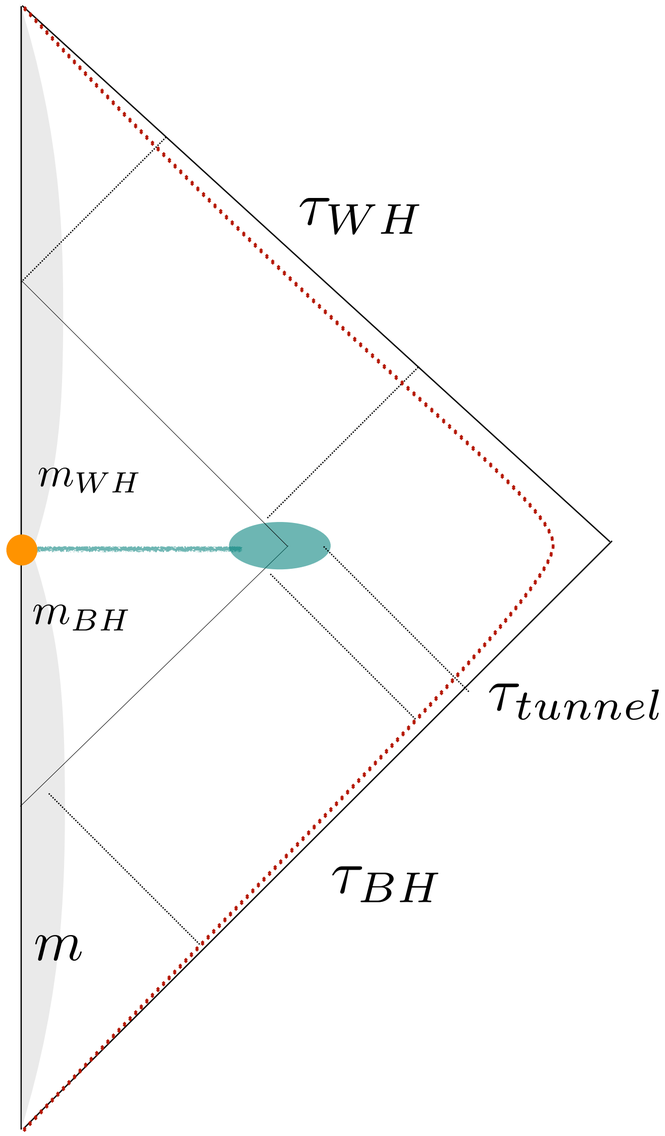

Covariant LQG
Can in principle be used to compute the tunnelling probability

- **The End of a Black Hole's Evaporation**, F D'Ambrosio, M Christodoulou, P Martin-Dussaud, C R, F Soltani, (2021) 2009.05016

From HR theory: $\tau_{BH} < m^3$

There is an argument for $\tau_{BH} \sim m^2$ $\quad \mathcal{R}\, \tau_{BH} \sim 1$

From information arguments: $\tau_{WH} \sim m^4$

III. The likely scenario

At the end of its life, a black hole quantum tunnels into an anti-trapped spacetime region (or “white hole”).

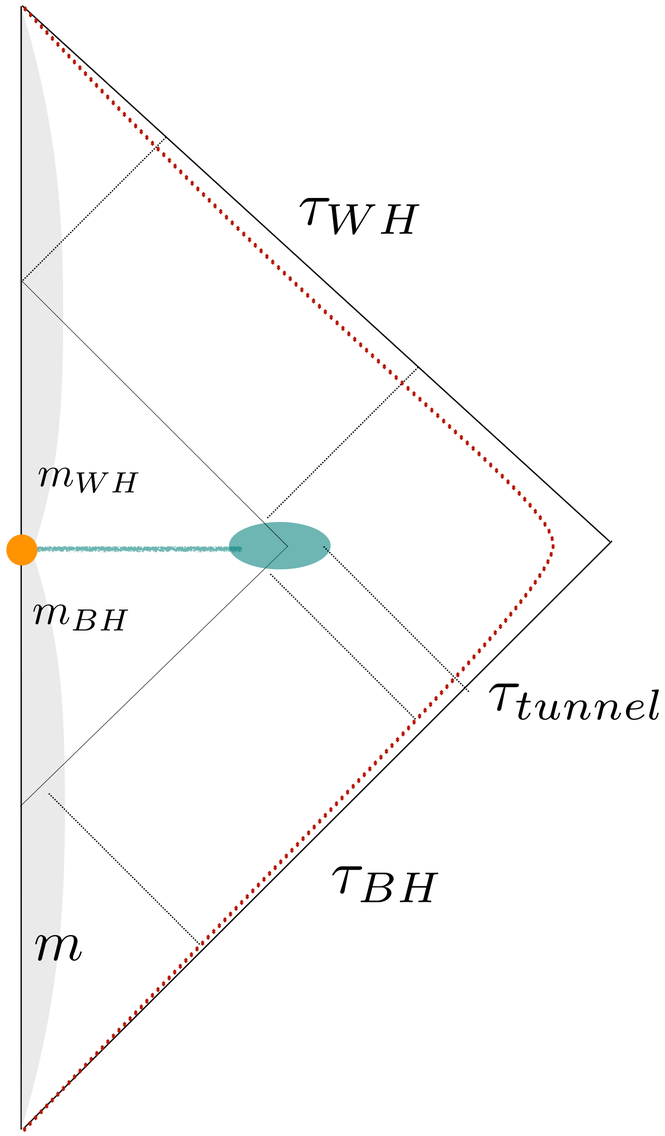

From HR theory: $\tau_{BH} < m^3$

There is an argument for $\tau_{BH} \sim m^2$ $\mathcal{R}\ \tau_{BH} \sim 1$

From information arguments: $\tau_{WH} \sim m^4$

- **White Holes as Remnants: A Surprising Scenario for the End of a Black Hole**, E Bianchi, M Christodoulou, F D'Ambrosio, H Haggard, CR, Class. Quant. Grav. 35 (2018) 225003, 1802.04264

Phenomenology from the B2W transition of primordial BH's?

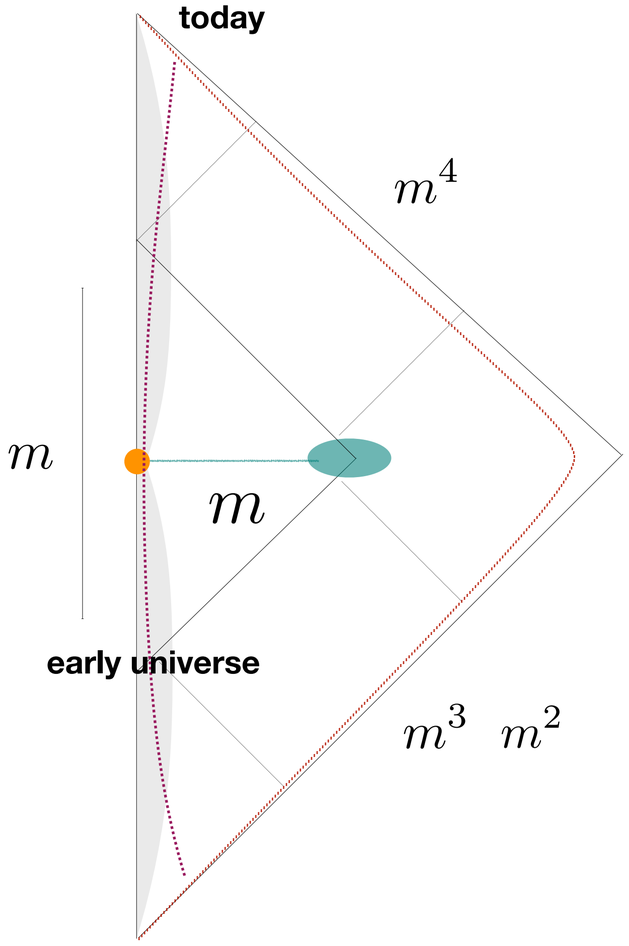

Dark matter candidate ?

Characteristic flattening of the red shift

$$z \sim z(m)$$

$$\lambda \sim E \sim T \sim H^{-1} \sim m^{-1}$$

$$\lambda_{obs} \sim \frac{2Gm}{c^2}(1+z) \quad \times \sqrt{\frac{H_0^{-1}}{6\,k\Omega_\Lambda^{1/2}}\,\sinh^{-1}\left[\left(\frac{\Omega_\Lambda}{\Omega_M}\right)^{1/2}(z+1)^{-3/2}\right]}$$

→ Distortion of the shape of the gamma-cosmic rays background

- **Small black/white hole stability and dark matter**, CR, F Vidotto, Universe 2018, 4(11), 127, 1805.03872
- **Fast Radio Bursts and White Hole Signals**, A Barrau, CR, F Vidotto, Phys. Rev. D 90, 127503 (2014), 1409.4031 m^2
- **Quantum-gravity phenomenology with primordial black holes,** F Vidotto, A Barrau, B Bolliet, M Schutten, C Weimer, Springer Proc.Phys. 208 (2018) 157-163, 1609.02159 m^3

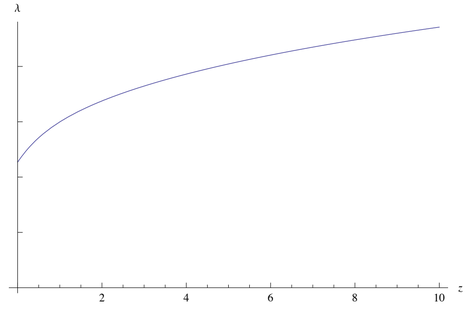

FIG. 1: White hole signal wavelength (unspecified units) as a function of z. Notice the characteristic flattening at large distance: the youth of the hole compensate for the redshift.

I. The false dogma

The number of *internal* states of a real black is **not** bounded by the area.

II. The A, B and C regions: three distinct physical problems

A: Tunnel to an anti-trapped region (white hole).
C: Bounce.
A: Formation of WH horizon.

III. The likely scenario

At the end of its life in a time m^3 (or m^2?), a black hole quantum tunnels into a (likely long living; m^4?) anti-trapped spacetime region (or "white hole") in the same space region as the BH.